REVISIONS			
LTR	DESCRIPTION	DATE	APPROVED

NANO POSITIONING INSERT

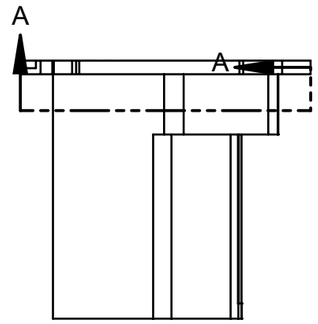

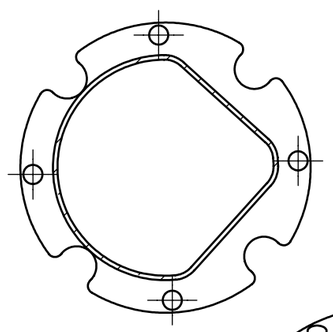

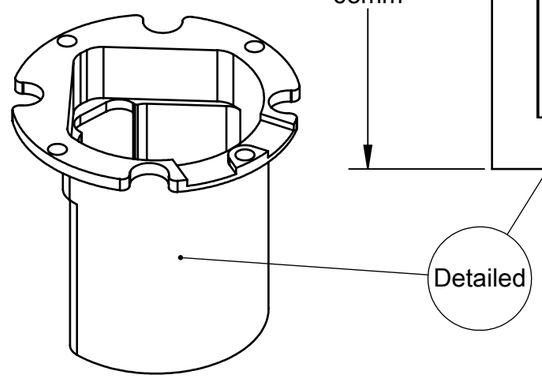

NANO POSITIONING INSERT VERSION

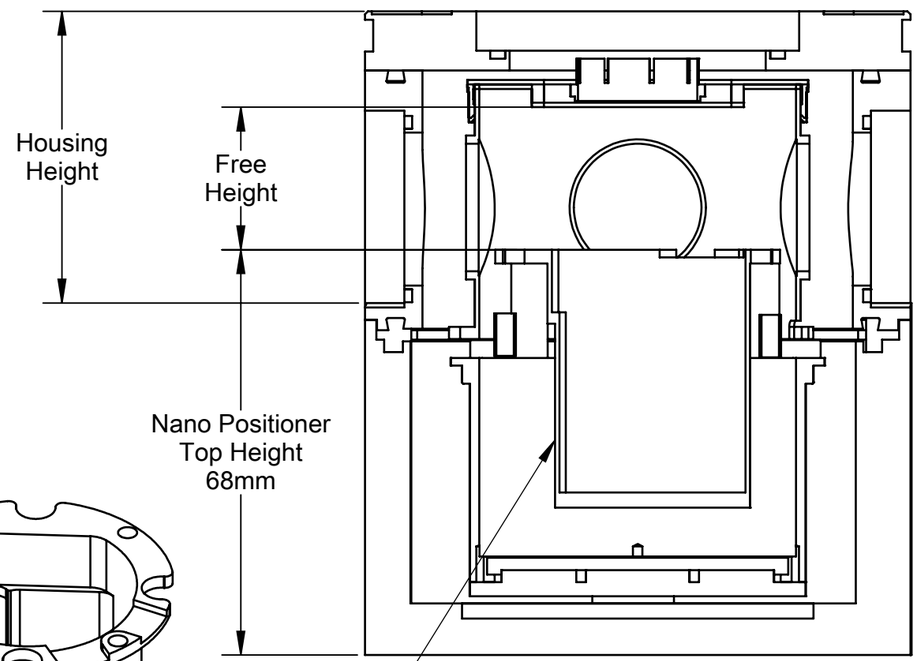

ELEVATED PLATFORM VERSION

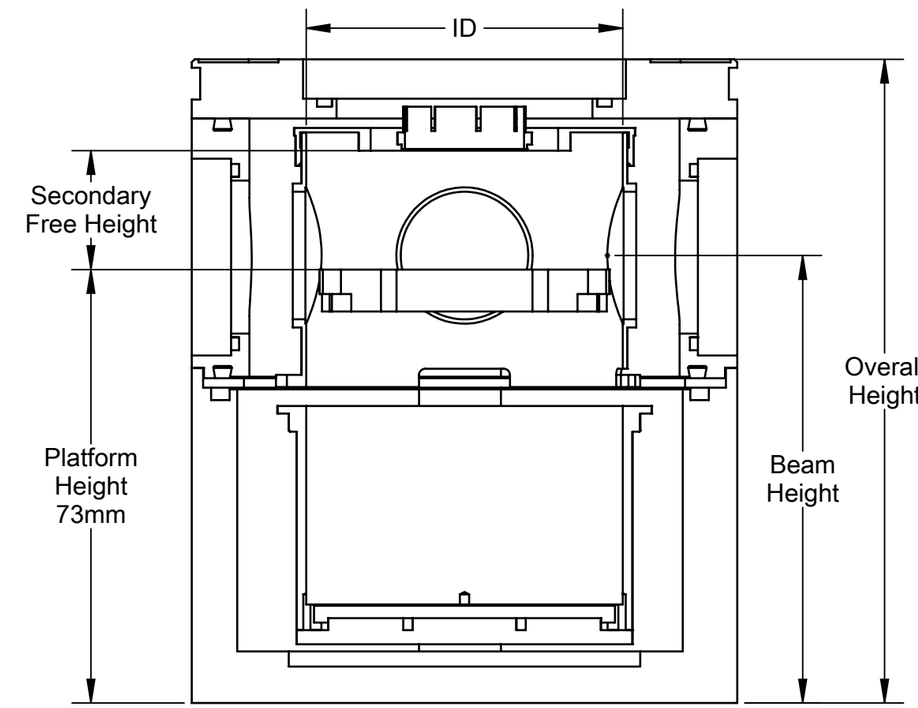

HOUSING STYLE	BEAM HEIGHT	OUTER HOUSING HEIGHT	OVERALL HEIGHT	ID*	FREE HEIGHT	SECONDARY FREE HEIGHT
Std. 30 mm	75	52	107	53	24	19
50 mm	90	79	135	53	52	47
Rotated 45º	90	81	137	53	42	37
100 mm	126	115	172	53	88	83
120 mm	N/A	147	203	53	119	114

*Allow for a 2mm clearance with the radiation sheild.

DIMENSIONS ARE IN MM
TOLERANCES ARE
DECIMALS
.X ±.05 .XXX ±.005
.XX ±.01 .XXXX +.0005 -.0000
FRACTIONS ±1/64
ANGLES ±1°

MATERIAL 1

FINISH

DO NOT SCALE DRAWING

APPROVALS		DATE
DRAWN	CALEB S.	5/3/2012
CHKD		
ENGR		
REL		
NEXT ASSY		USED ON

NANO POSITIONING INSERT DIMENSIONS

FILENAME: DOC-133

MONTANA INSTRUMENTS CORPORATION
BOZEMAN, MT

SIZE	CAGE	DRAWING NO.	
B		DOC-133	
SCALE	REV	REA NO.	SHEET
N/A	A1		1 OF 1

Friday, May 04, 2012 12:48:33 PM, MI Drafting