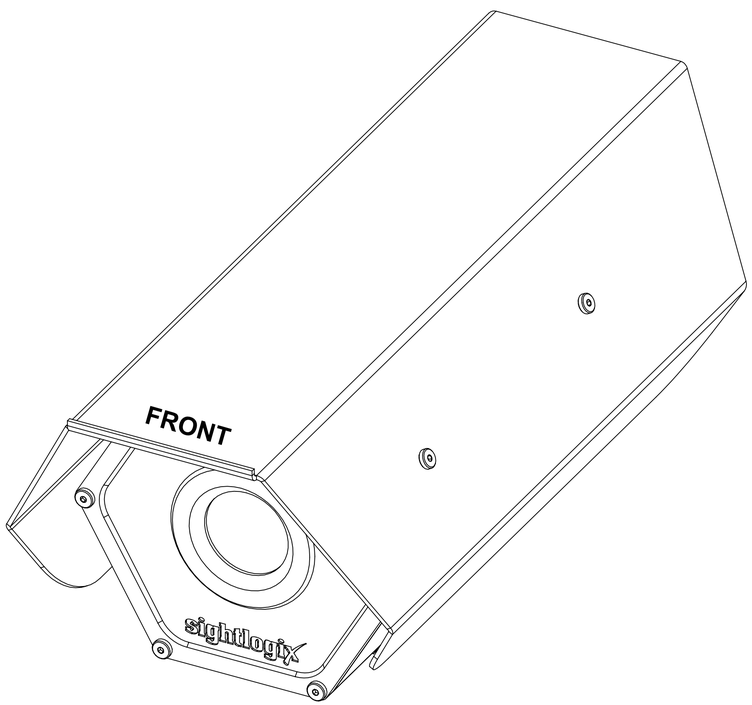
FRONT
sightlogix

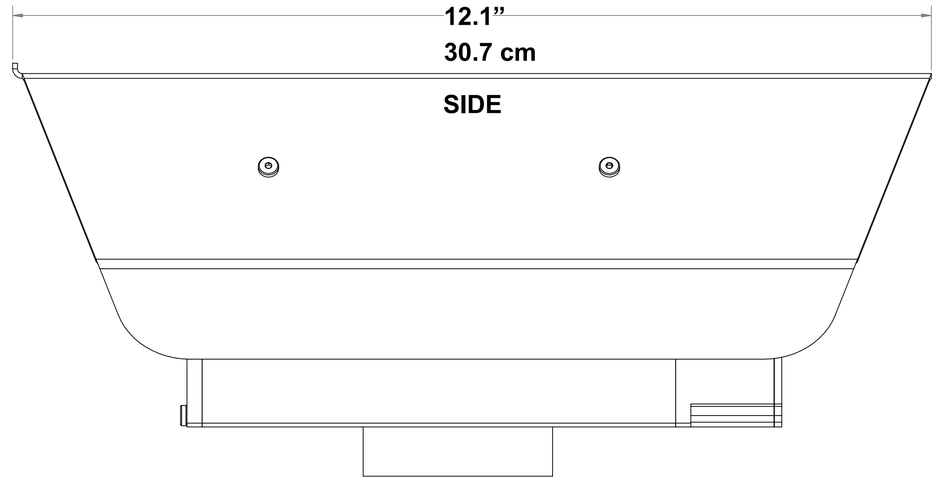
12.1”
30.7 cm
SIDE

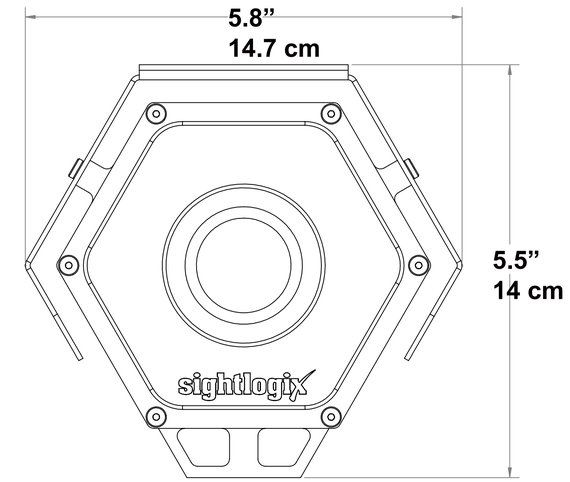
5.8”
14.7 cm
5.5”
14 cm
sightlogix

FRONT

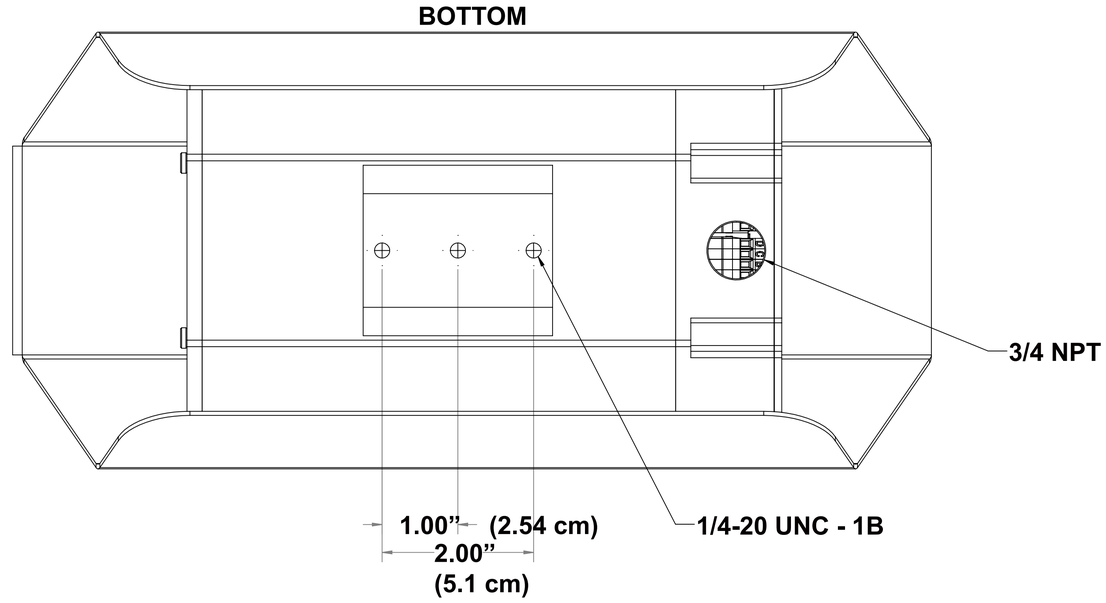
BOTTOM
3/4 NPT
1.00”
(2.54 cm)
2.00”
(5.1 cm)
1/4-20 UNC - 1B

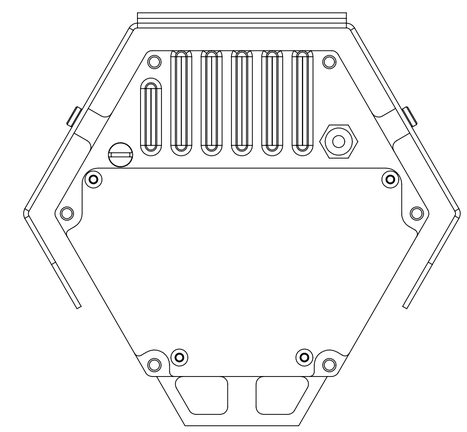

REAR