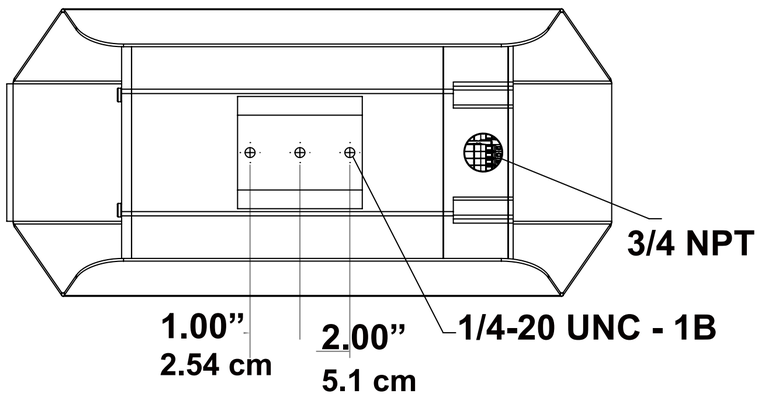
3/4 NPT
1.00”
2.54 cm
2.00”
5.1 cm
1/4-20 UNC - 1B

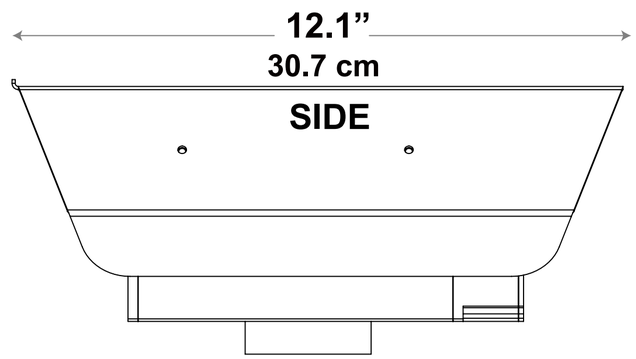
12.1”
30.7 cm
SIDE

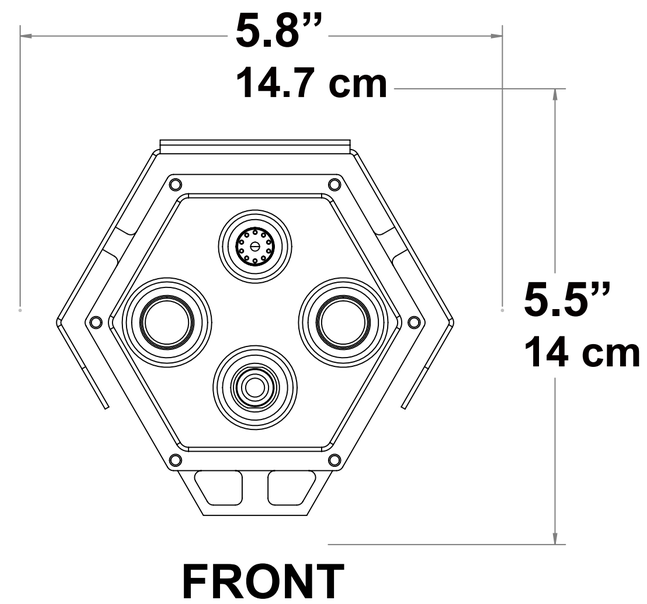
5.8”
14.7 cm
5.5”
14 cm
FRONT

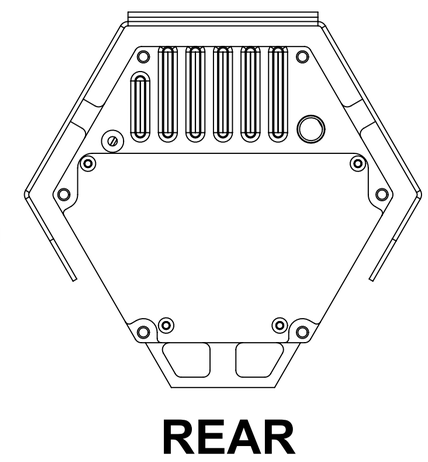
REAR