Ercoupe MEMORANDUM

ERCOUPE SERVICE MEMORANDUM

No. 38

SUBJECT: Trim Tab Control Installation

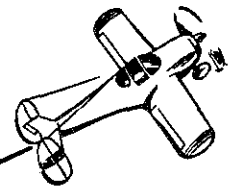

1. The longitudinal trim system for the Ercoupe has been redesigned to employ a movable section on the trailing edge of the elevator. This method replaces the Trim System discussed in our Memorandum No. 19, dated April 26, 1946. The change became effective on Ercoupe serial number 2123. The improved characteristics obtained with the new System have resulted in numerous inquiries requesting information and material to incorporate this change on airplanes, serial numbers 113 to 2122 inclusive.

2. The material required to make this change, with the exception of the elevator (415-22017), may be purchased in kit form for the list price of $15.00. The kit is identified by the name of Trim Control System Kit No. 4 and contains the following material:

Part Name	*Part Number*	*Number Req'd.*
Plate—Crank Cover	415-31194-R	1
Handle Assembly	415-31195	1
Assembly Angle	415-31196	2
Warning Plate	415-51026	1
Assembly Plate—Cover	415-31212-L	1
Wire	415-52070-33	1
Flexible Conduit Assembly	415-52274	1
Assembly Conduit	415-52275	1
Wire Swivel	415-52276	2
Assembly Conduit	415-52277	1
Spacer .028 ID x ¼" OD x ½" lg.	415-53201-1	2
Rubber Tubing	3/16" ID x 5/16" OD x 1¼"	1
Grommet	AN931-3-5	1
Grommet	AN931-3-9	1
Bolt	AN3-3A	2
Nut	AN340-2	3
Nut	AN365-1032	3
Nut	AN924-3D	2
Nut	AN365-632	8
Acorn Nut	No. 6-32-NC3	2
Screw	AN526-10-6	1
Screw	AN515-2R4	3
Screw	AN526-6-5	2
Screw	AN526-6-6	4
Screw	AN515-6-6	8
Screw	AN526-C-623-12	2
Nickel Plated P.K. Screws	No. 4 x ¼"	6
Washer	AN960-A616-L	2
Washer	AN936-A2	3
Washer (Lock)	AN936-A6	2
Union	AN832-3D	2
Clamp	AN791-E-3-Adel	2
Clamp	AN755-3	2

Special Equipment Required

1. 90° Angle Drill
2. No. 9 Drill Adapter
3. No. 27 Drill Adapter
4. No. 40 Drill Adapter

The Change may be accomplished as follows:

A. Removal of old unit.

1. Removal of Stabilizer and elevator.
   - a. Remove fairing in front of stabilizer and tail cone fairing.
   - b. Disconnect trim unit spring from the elevator.
   - c. Disconnect push-pull rod at the elevator and allow it to swing free.
   - d. Remove four (4) bolts holding stabilizer to tail cone.
   - e. Raise stabilizer free of tail cone and disnect rudder control cables from bellcrank.
   - f. Remove elevator from the stabilizer.
2. Removal of Trim Unit.
   - a. Disconnect trim unit spring from the trim cable and pull cable through the fuselage into the cabin. Discard cable and spring. Pulley under the floor board may be left in position to avoid removal of floor boards.

b. Remove trim crank assembly from the instrument panel.

(1) Remove two (2) Allen set Screws from the crank.

(2) Remove the two screws in rear of lower channel of instrument panel.

(3) Remove three (3) Phillips head screws which connect trim unit to instrument panel.

(4) Discard removed parts.

3. Removal of Baggage Compartment.

a. Remove cover plates from ends of compartment.

b. Disconnect forward side of compartment from top of seat back.

c. Disconnect rear side of baggage compartment from deck plate and allow compartment to rest on bottom of fuselage, still attached by hold-down straps.

B. Installation of New Trim Assembly.

1. Handle Assembly Installation. (See sketch No. 1.)

a. Drill two holes No. 9 (.196) in upper longitudinal at the left side of the cabin. These holes are located 1⅛" and 4⅝" forward of rear end of horizontal flange 15/32" from outboard edge of longitudinal.

b. Install bracket with two AN3-3A bolts and AN365-1032 elastic stop nuts.

c. Drill through the outer skin with a No. 9 drill, using bottom hole in bracket as template. Install an AN526-C-10-C screw and an AN365-1032 elastic stop nut.

2. Installation of Union (AN832-3D) on frame "F".

a. Drill a 7/16" hole 6-11/16" above the horizontal center line of the frame, and 1" inboard from outside edge of frame on left side of tail cone. (While working behind cockpit, be sure to block under tail to prevent it from dropping down.)

b. Insert the union AN832-3D from the rear and install washer AN960-A616-L and nut AN924-3D.

3. Installation of Clamp (791-E-3-Adel) on frame "E".

a. Drill a 1/4" hole 2-5/16" below top of the frame and 19-1/16" to the left of the vertical center line.

b. Place the clamp on the forward side of frame "E", in line with the 1/4" hole and drill through the hole in the right angle clip into frame "E" with a No. 28 drill.

c. Install the clip using an AN515-6-6 screw and an AN365-632 elastic stop nut through the No. 28 hole.

4. Installation of Flexible Conduit (415-52277) (See sketch No. 2).

a. Drill a No. 9 hole in frame "C" and "D" in line with and at each end of the tubular section at the top of the left inner cabin skin. (415-31035)

b. Connect conduit to forward end of union on frame "F" and pass other end through hole and clamp on frame "E" and thread through No. 9 hole in frame "D" into tubular section on top of inner cabin skin and through No. 9 hole in frame "C" to the trim handle.

5. Installation of Union (AN832-3D) on Frame "I".

a. Drill a 7/16" hole 2-37/64" below top of the frame and 3-3/8" to the left of vertical center line. This can be done through the stabilizer cut-out at the rear of the tail cone.

b. Insert union AN832-3D from the rear end and install washer AN960-A616-L and nut AN924-3D.

6. Installation of conduit (415-52275).

a. Connect one end of the conduit to rear end of union on frame "F" and attach the other end to the union on frame "I".

b. Install Adel Clamps AN755-3 on conduit at frames "G" and "H". Drill frame flanges with No. 28 drill through clamp attaching holes and fasten with AN515-6-6 screws and AN365-632 elastic stop nuts. Care should be taken that conduit does not kink or bend between frames.

7. Installation of Conduit (415-52274) in stabilizer. (See sketch No. 2.)

a. Drill a 5/16" hole 8-23/32" to the right of the center line of the rear spar of the stabilizer and 27/32" above horizontal center line of the spar. Insert rubber grommet (AN931-3-5).

b. Drill a 13/16" hole in the right diagonal rib (415-21004) at a point 5-11/16" forward of its rear end, and 7/8" above horizontal center line. Drill a No. 28 hole 5-5/16" forward of the rear end of same rib and 1/4" above horizontal center line. Install Adel Clamps (791-E-3) with screw (AN515-6-6) and elastic stop nut (AN365-632) on the inboard side of rib.

c. Drill a 1/2" hole through the front spar 2-5/16" to the left of the center of the stabilizer and 3/8" above the center line. Insert rubber grommet (AN931-3-9).

d. Install the flexible conduit by inserting the plain end first, through the grommet in the forward spar, through the Adel Clamp on the diagonal rib and out the grommet in the rear spar.

e. Attach the new elevator to the stabilizer. Run conduit through the grommet in the leading edge and out of the fairing on the bottom skin of the elevator before attaching hinges. Slip rubber tubing 3/16" ID x 5/16" OD x 1-1/4" over conduit into the fairing. Glue in place to fairing with No. M-(EC669) cement. (Product of the Minnesota Mining and Manufacturing Co.) Care must be taken not to pivot elevator beyond 80° up, as this will kink wire conduit.

8. Assembly of stabilizer to fuselage.
   a. Connect rudder cables.
   b. Secure nut on flexible conduit protruding from leading edge of stabilizer to fitting on frame "I".
   c. Replace attaching bolts in stabilizer and secure it in place.
   d. Connect elevator control rod, and secure nut.
   e. Adjust rudder cable tension (Service Department Memo. No. 35).

9. Installation of Trim Control Wire.
   a. Pass wire through end of flexible conduit protruding from elevator lower skin. Elevator must be in neutral position when wire is being fed through conduit.
   b. Assemble wire swivel on trim handle in cockpit and extend wire through swivel approximately 1/2"; secure swivel. Wire should be on outboard side of trim handle.

10. Installation of Crank Cover Plate.
   a. Drill a No. 28 hole through left longitudinal 1-1/32" forward of the center of the forward bolt holding trim handle assembly to the longitudinal 3/8" from outboard edge. Drill another No. 28 hole 5/8" forward of this one. Install bracket (415-31196) by means of two (2) screws (AN515-6-6) and elastic stop nuts (AN365-632).
   b. On right side of cabin, install another bracket in a similar manner. The distance from the rear end of the longitudinal to the first hole in the bracket is 5-21/32".
   c. Attach cover plates with two (2) AN526-632-5 screws which go into clinch nut on each bracket.
   d. Drill through three rear holes in cover plates into frame "C" with a No. 43 drill. Place No. 4 x 1/4" nickel-plate "P.K." screws in these.
   e. Run a No. 27 drill through the lower forward holes and through outer skin. Put truss head screws (AN526-C-632-12) through from the outside, inserting a spacer, .028 x 1/4" OD x 1/2", between each cover plate and outer skin. Secure with lockwashers AN936-A6 and acorn nuts No. 6-32-NC3.

11. Rigging trim tab.
   a. If Service Memorandum No. 30 has been complied with, it will be necessary to rework the elevator.
      (1) Drill out six (6) rivets securing anchor plate to trailing edge and trim tab. (Use No. 30 drill.)
      (2) Remove two bolts (AN526-632-7), from trim tab and discard anchor plate.
      (3) Reinstall control horn to hinged trailing edge using the same bolts that were just removed.
   b. Rigging Trim Tab. (See Sketch No. 4.)
      (1) Place trim control handle in cockpit to full forward position.
      (2) With elevator in neutral position, place a straight edge along the elevator upper skin, longitudinally with one end extending over tab.
      (3) With the elevator upper skin and top of trim tab lined up along straight edge, secure trim wire to swivel on elevator.

      NOTE: With the trim tab rigged as above, and the trim crank handle full forward, the ship should be trimmed for high speed flying at 115-125 MPH. With the trim crank handle full back, the airplane is trimmed for a power off glide at 65-75 MPH and a full power climb of 60-70 MPH.

12. Installation of Warning Plate (415-51026) on Instrument Panel (to cover hole left by removal of old trim crank assembly).
   a. Using warning plate as a template, and with warning plate centered on hole in instrument panel left by removal of old trim crank assembly, drill three (3) No. 40 holes.
   b. Attach warning plate to instrument panel using three (3) each AN515-2R4 screws, AN936-A2 washers, AN340-2 nuts.

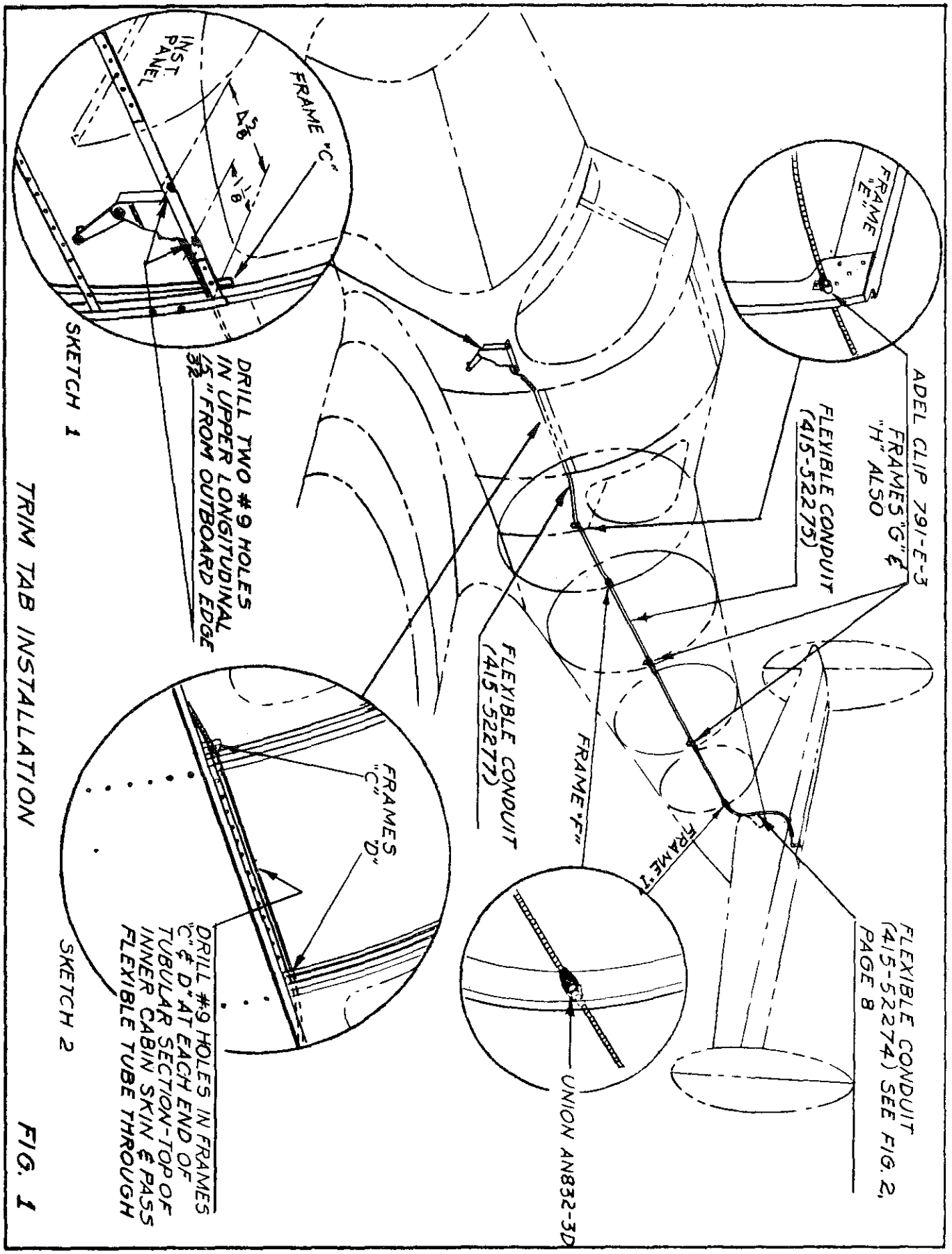

TRIM TAB INSTALLATION

FIG. 1

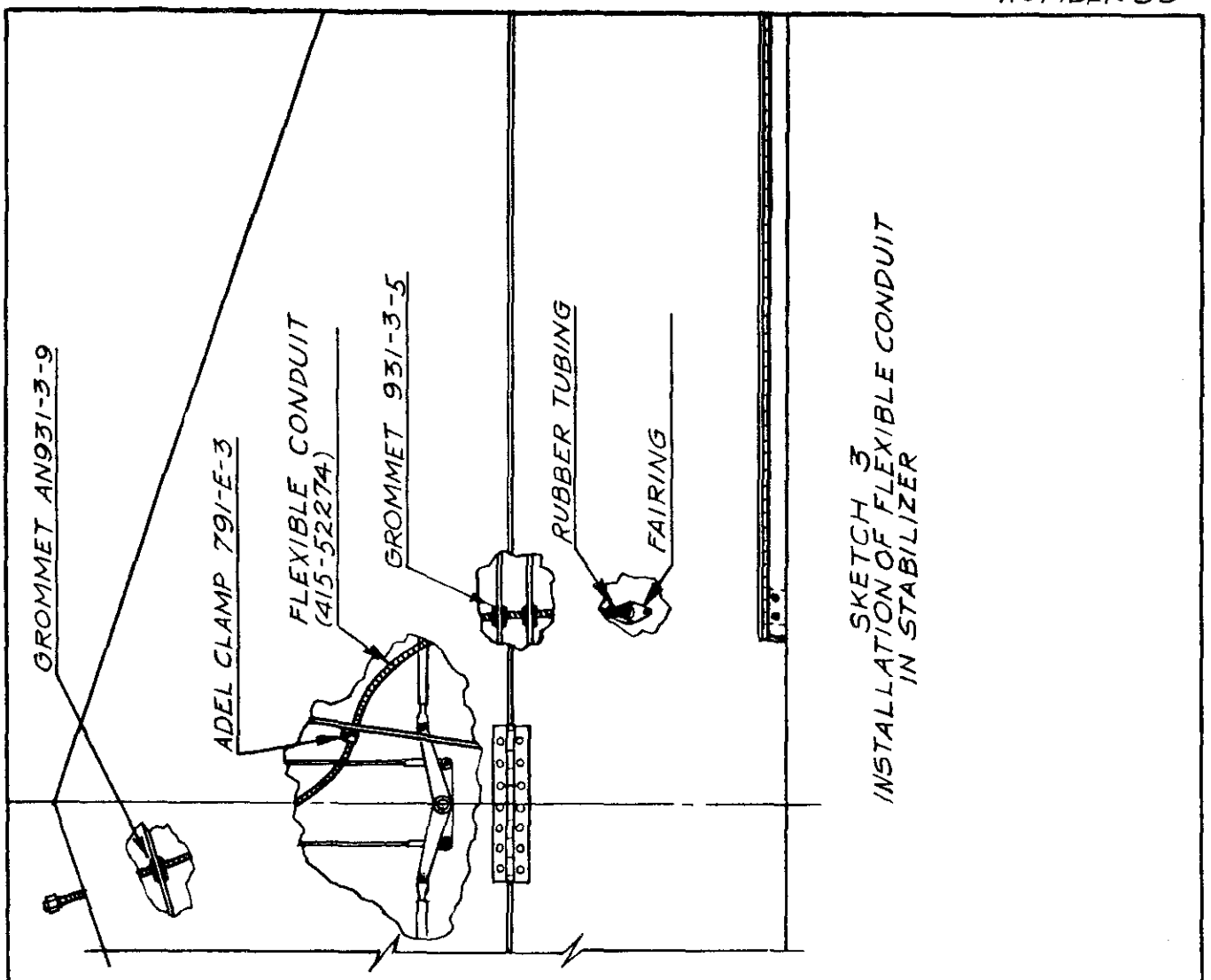

SKETCH 3
INSTALLATION OF FLEXIBLE CONDUIT IN STABILIZER

VIEW A--A

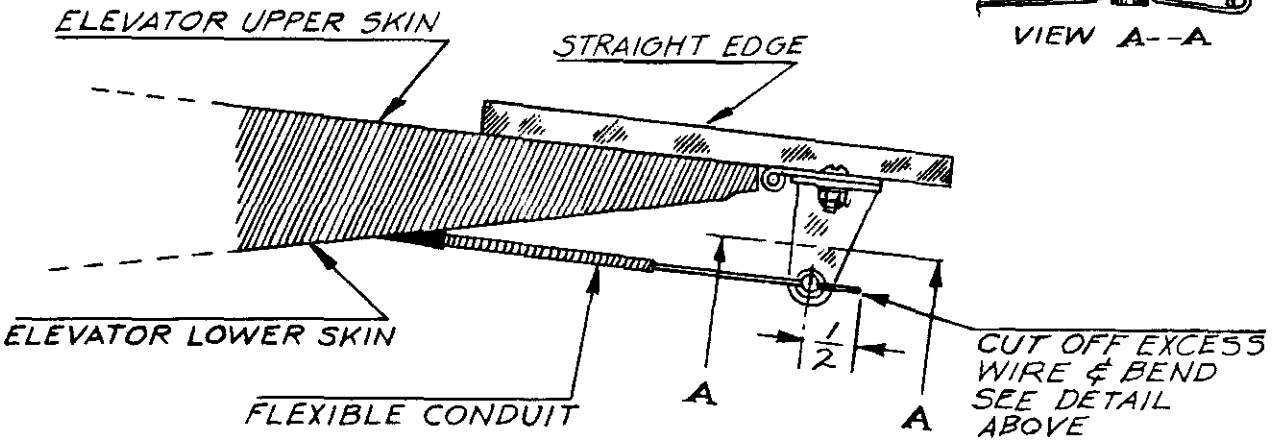

SKETCH 4
METHOD OF SETTING TRIM TAB